HI-TACAN RWY 12

[redacted]

JAL-323 [USAF]

ATIS ★ 273.5
MOUNTAIN HOME APP CON
124.8 259.1
MOUNTAIN HOME TOWER ★
133.85 253.5
GND CON
120.5 275.8
CLNC DEL
127.1 373.0

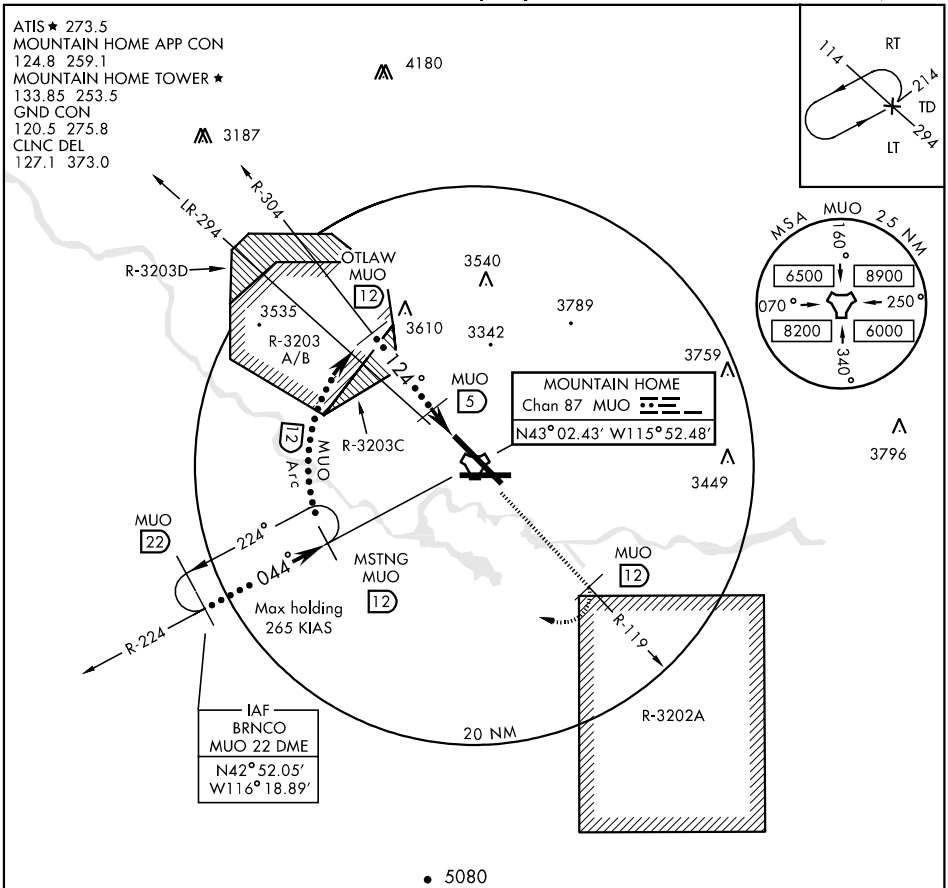

EMERG SAFE ALT 100 NM 14,100

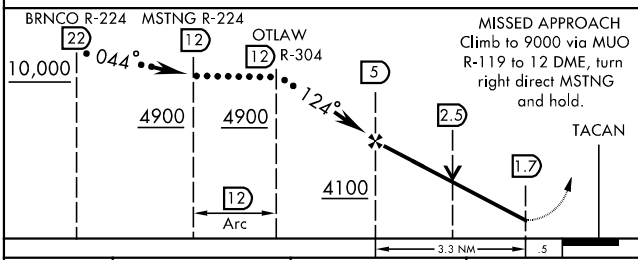

MISSED APPROACH
Climb to 9000 via MUO R-119 to 12 DME, turn right direct MSTNG and hold.

ELEV 2996

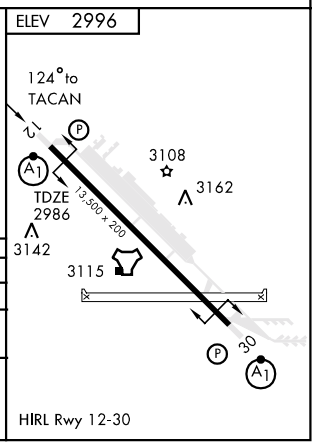

HIRL Rwy 12-30

CATEGORY	C	D	E
S-12 *	3360/40 374 (400-¾)		
CIRCLING * *	3460-1½ 464 (500-1½)	3560-2 564 (600-2)	

* When ALS inop, increase CAT C RVR to 50 and vis to 1 mile, CAT DE RVR to 60 and vis to 1¼ miles.
* * Circling NE of Rwy 12-30 not authorized.

[redacted]