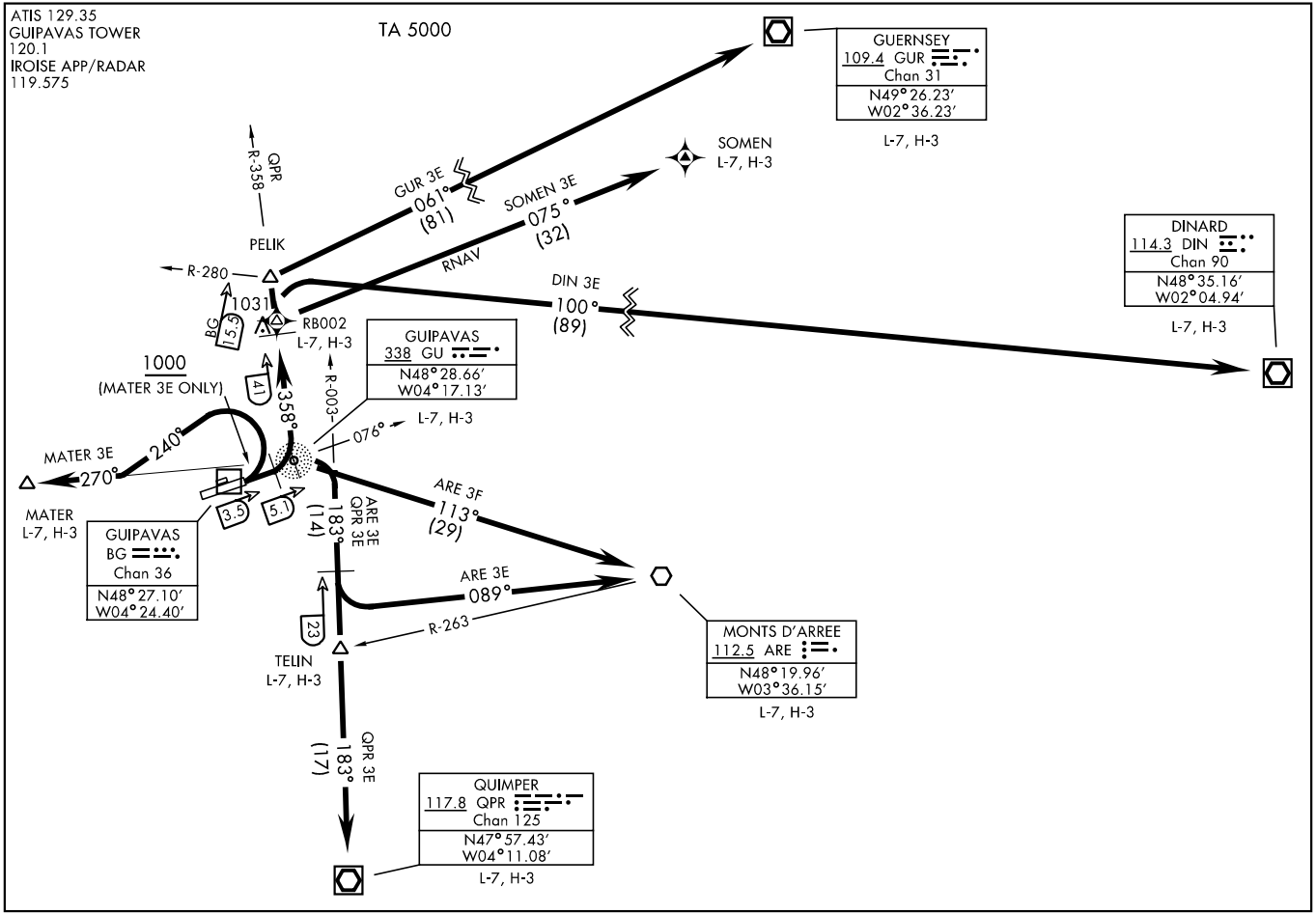
ATIS 129.35
GUIPAVAS TOWER
120.1
IROISE APP/RADAR
119.575
TA 5000
GUERNSEY
109.4 GUR
Chan 31
N49°26.23′
W02°36.23′
L-7, H-3
SOMEN
L-7, H-3
QPR
R-358
GUR 3E
061°
(81)
SOMEN 3E
075°
(32)
RNAV
PELIK
R-280
1031
RB002
L-7, H-3
BG
15.3
DIN 3E
100°
(89)
DINARD
114.3 DIN
Chan 90
N48°35.16′
W02°04.94′
L-7, H-3
GUIPAVAS
338 GU
N48°28.66′
W04°17.13′
L-7, H-3
1000
(MATER 3E ONLY)
4.1
358°
R-003
076°
240°
MATER 3E
270°
MATER
L-7, H-3
3.5
5.1
GUIPAVAS
BG
Chan 36
N48°27.10′
W04°24.40′
ARE 3E
QPR 3E
183°
(14)
ARE 3F
113°
(29)
ARE 3E
089°
R-263
23
TELIN
L-7, H-3
MONTS D'ARREE
112.5 ARE
N48°19.96′
W03°36.15′
L-7, H-3
QPR 3E
183°
(17)
QUIMPER
117.8 QPR
Chan 125
N47°57.43′
W04°11.08′
L-7, H-3