HI-TACAN RWY 35

[USN] AL-2467 (ITAF)

DECIMOMANNU, ITALY

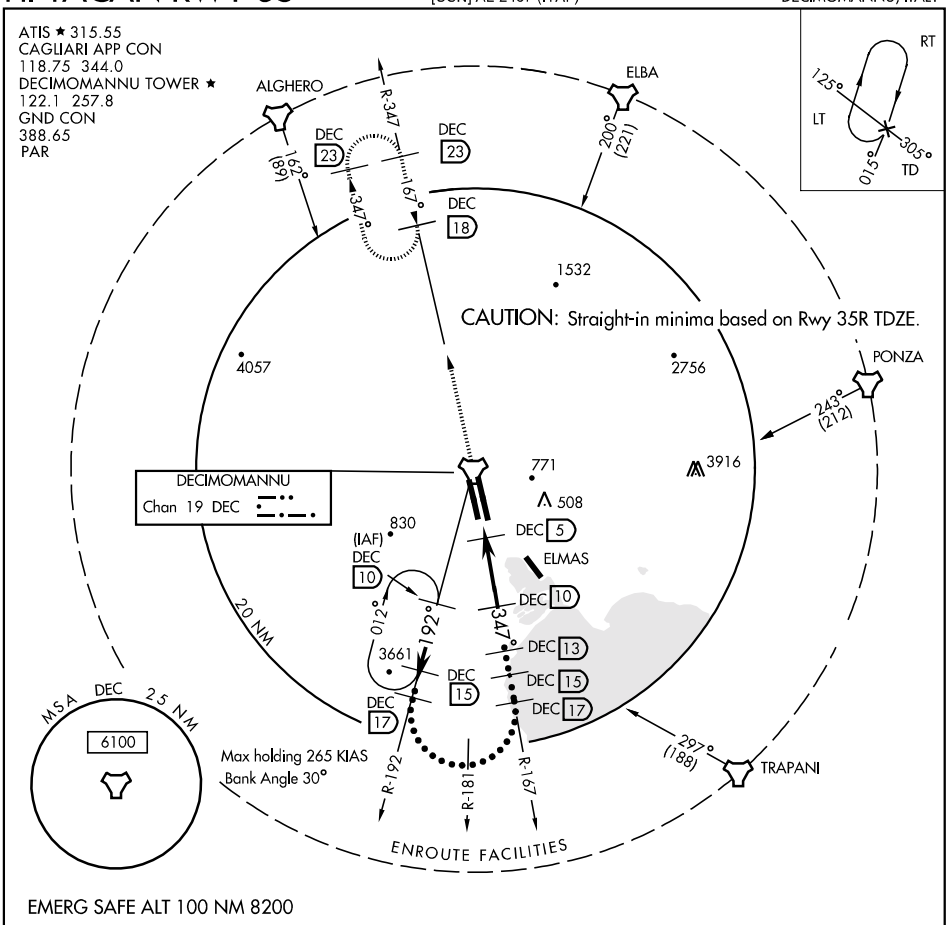

EMERG SAFE ALT 100 NM 8200

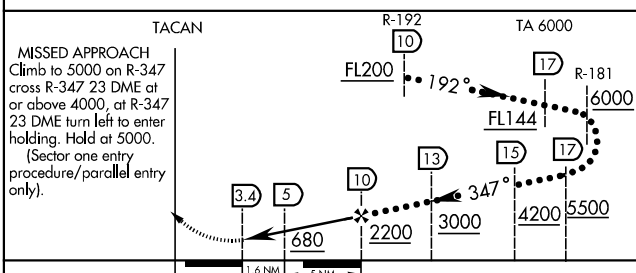

MISSED APPROACH
Climb to 5000 on R-347 cross R-347 23 DME at or above 4000, at R-347 23 DME turn left to enter holding. Hold at 5000.
(Sector one entry procedure/parallel entry only).

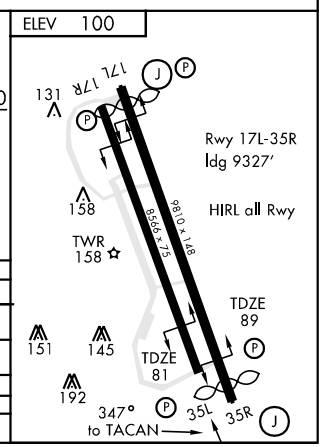

CATEGORY	C	D	E
S-TAC 35 *	600-1600m 511 (600-1600m)		600-2000m 511 (600-2000m)
CIRCLING	660-2400m 560 (600-2400m)	700-3200m 600 (600-3200m)	1220-4800m 1120 (1200-4800m)
S-PAR 35 *	301-800m 212 (300-800m)		GS 2.8°
S-PAR 35 *	315-800m 226 (300-800m)		GS 2.5°

* When ALS inop, increase vis 800m.

HI-TACAN RWY 35
39° 21'N-08° 58'E
DECIMOMANNU, ITALY
DECIMOMANNU (LIED)